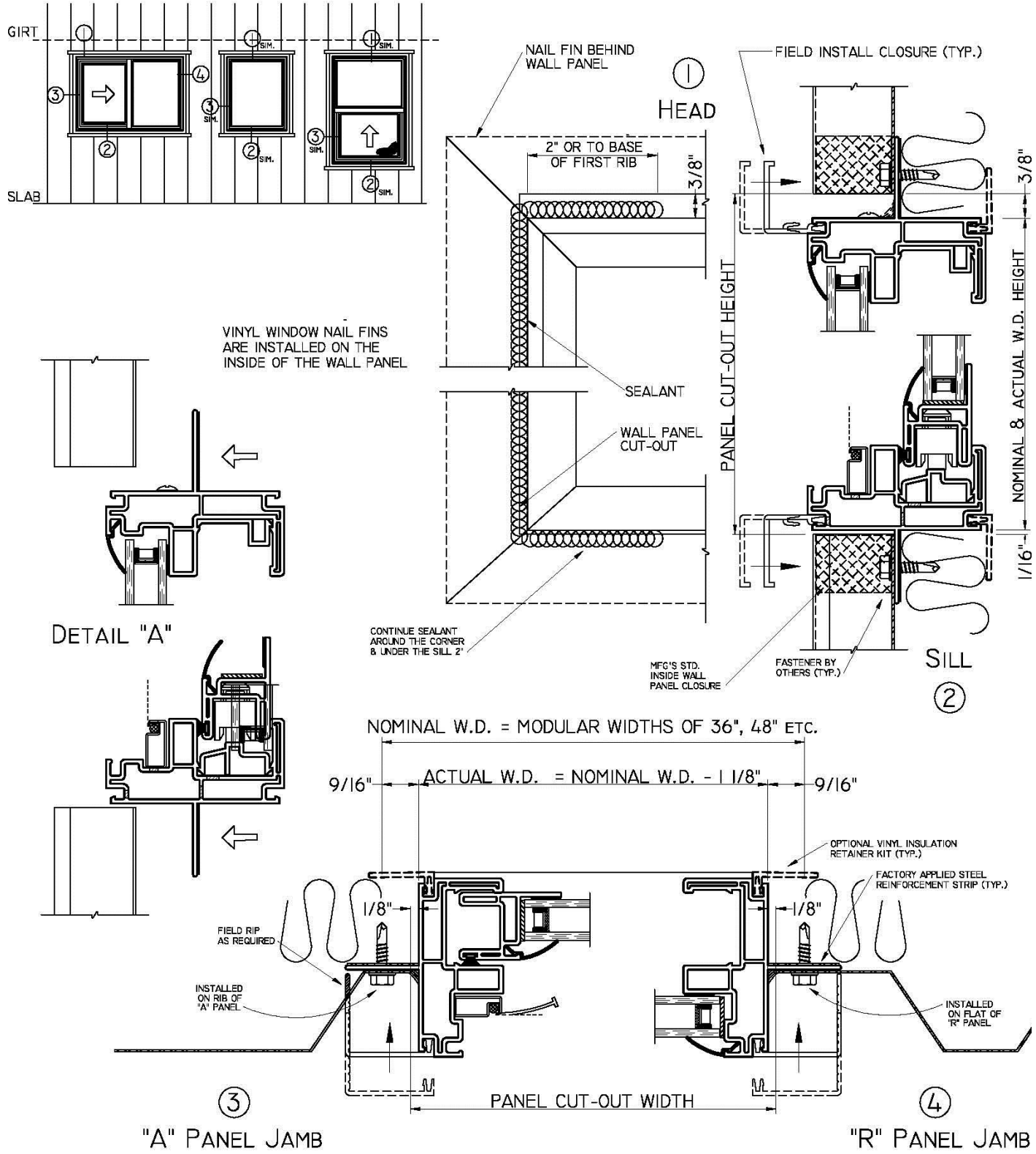Sealing instructions – Vinyl Windows